DS-7732NI-M4/24P
32-ch 1.5U 24 PoE 8K NVR



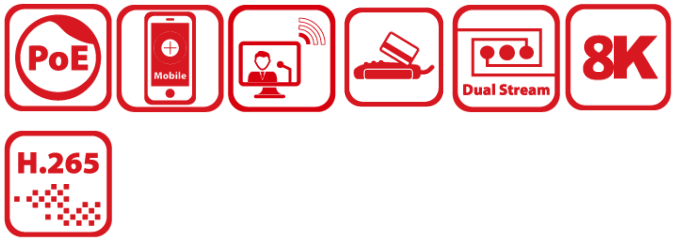

- H.265+/H.265/H.264+/H.264 video formats
- Up to 32-ch IP camera inputs
- Up to 40 x 1080p@ 30fps decoding capacity
- Up to 320 Mbps incoming bandwidth
- Up to 8-ch IP speakers can be connected

▪ Function

Professional and Reliability

- H.265+ compression effectively reduces the storage space by up to 75%
- Dual-stream recording saves bandwidth
- Adopt stream over TLS encryption technology which provides more secure stream transmission service
- Support double verification for playback and downloading

HD Video Output

- Provide independent HDMI and VGA outputs
- HDMI video output at up to 8K resolution
- Dual 4K HDMI output resolution

Storage and Playback

- Up to 4 SATA interfaces for HDD connection (up to 20 TB capacity per HDD)
- 16-ch synchronous playback

Smart & POS Function

- Support multiple VCA (Video Content Analytics) events
- Configurable special camera smart functions, such as VCA detection (motion, line crossing, intrusion, etc.), heat map, ANPR, and people counting
- POS information overlay on live view and playback, and POS triggered recording and alarm

Network & Ethernet Access

- 24 independent PoE network interfaces
- 1 self-adaptive 10/100/1000 Mbps Ethernet interface
- Hik-Connect & DDNS (Dynamic Domain Name System) for easy network management
- Smooth streaming technology
- Support web access without plug-in

▪ Specification

Video and Audio	
IP Video Input	32-ch Up to 32 MP resolution *: The NVR supports up to 8-ch 32/24/16 MP IP video inputs.
Incoming Bandwidth	320 Mbps
Outgoing Bandwidth	400 Mbps
HDMI 1 Output	8K (7680 × 4320)/30Hz, 4K (3840 × 2160)/60Hz, 4K (3840 × 2160)/30Hz, 2K (2560 × 1440)/60Hz, 1920 × 1080/60Hz, 1280 × 720/60Hz
HDMI 2 Output	4K (3840 × 2160)/60Hz, 4K (3840 × 2160)/30Hz, 2K (2560 × 1440)/60Hz, 1920 × 1080/60Hz, 1280 × 720/60Hz
VGA Output	1920 × 1080/60Hz, 1280 × 720/60Hz
Video Output Mode	HDMI1/VGA simultaneous output, HDMI2/VGA independent output
CVBS Output	1-ch, BNC (1.0 Vp-p, 75 Ω), resolution: PAL: 704 × 576, NTSC: 704 × 480
Audio Output	1-ch, RCA (Linear, 1 KΩ)
Two-Way Audio	1-ch, RCA (2.0 Vp-p, 1 KΩ, using the audio input)
Decoding	
Decoding Format	H.265+/H.265/H.264+/H.264
Recording Resolution	32 MP/24 MP/16MP/12 MP/8 MP/7 MP/6 MP/5 MP/4 MP/3 MP/1080p/UXGA/720p/VGA/4CIF/DCIF/2CIF/CIF/QCIF *: The NVR supports up to 8-ch 32/24/16 MP IP video inputs.
Synchronous Playback	16-ch
Decoding Capability	2-ch@32 MP (30 fps); 3-ch@24 MP (30 fps); 5-ch@16MP (30 fps); 6-ch@12MP (30 fps);10-ch@8 MP (30 fps); 13-ch@6 MP (30 fps);16-ch@5 MP (30 fps);32-ch@2MP(30 fps)
Dual-Stream Recording	Support
Stream Type	Video, Video & Audio
Audio Compression	G.711ulaw/G.711alaw/G.722/G.726/AAC/MP2L2
Network	
Remote Connection	128
Network Protocol	TCP/IP, DHCP, IPv4, IPv6, DNS, DDNS, NTP, RTSP, SADP, SMTP, SNMP, NFS, iSCSI, ISUP, UPnP™, HTTP, HTTPS, ONVIF(Version 2.2), OTAP
Network Interface	1, RJ-45 10/100/1000 Mbps self-adaptive Ethernet interface
Camera Access Protocol	ONVIF(Version 2.5), RTSP
PoE	
Interface	24, RJ-45 10/100 Mbps self-adaptive Ethernet interface
Power	≤ 210 W
Standard	IEEE 802.3 af/at
Auxiliary Interface	
eSATA	1 eSATA interface
SATA	4 SATA interfaces
Capacity	Up to 20 TB capacity for each disk
Serial Interface	2 RS-485 (half-duplex), 1 RS-232
Alarm In/Out	16/9
USB Interface	Front panel: 2 × USB 2.0; Rear panel: 1 × USB 3.0

Ctrl 12V	Controllable 12 VDC, 1 A power output for external alarm device; The power will be turned on when the alarm output is triggered. *: The Ctrl 12V power is controlled by alarm output 9.
DC 12V	12 VDC, 1 A power output
General	
Power Supply	100 to 240 VAC, 50 to 60 Hz
Consumption	≤ 15 W (without HDD and PoE off)
Working Temperature	-10 °C to 55 °C (14 °F to 131 °F)
Working Humidity	10% to 90%
Chassis	19-inch rack-mounted 1.5U chassis
Dimension (W × D × H)	445 × 400 × 75 mm (17.5"× 15.7" × 3.0")
Weight	≤ 5 kg (without HDD, 11 lb.)
Certification	
FCC	Part 15 Subpart B, ANSI C63.4-2014
CE	EN 55032:2015+A1:2020, ENIEC61000-3-2:2019+A1:2021, EN 61000-3-3:2013+A1:2019, EN 50130-4:2011+A1:2014, EN 55035:2017+A11:2020
Obtained Certification	CE、REACH、WEEE、FCC、CB、RCM、KC、UL
Cyber Security	
EN 303645	Support
Secure Boot	Support
Secure Component Verification SVC	Support
Password Protection	Support
IP & MAC Address Filtering	Support
HTTPS Encryption	Support
Live View & Playback Stream Encryption	Support : AES128
IEEE802.1X(EAP-TLS) Network Access Control	Support
Signed Firmware	Support
Others	Digest authentication: Support User access log : Support Centralized certificate management : Support Brute force delay protection : Support

▪ Physical Interface

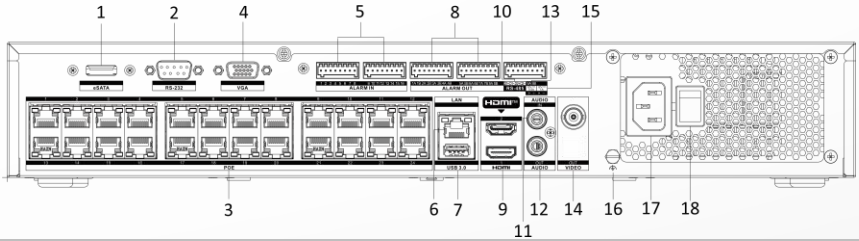

No.	Description	No.	Description
1	eSATA interface	10	RS-485 interface
2	RS-232 interface	11	AUDIO IN
3	Network interfaces with PoE	12	AUDIO OUT

	functions		
4	VGA interface	13	Ctrl 12V
5	ALARM IN	14	VIDEO OUT
6	LAN interface	15	DC 12V
7	USB 3.0 interface	16	GND
8	ALARM OUT	17	Power supply
9	HDMI interface	18	Power switch

▪ Dimension

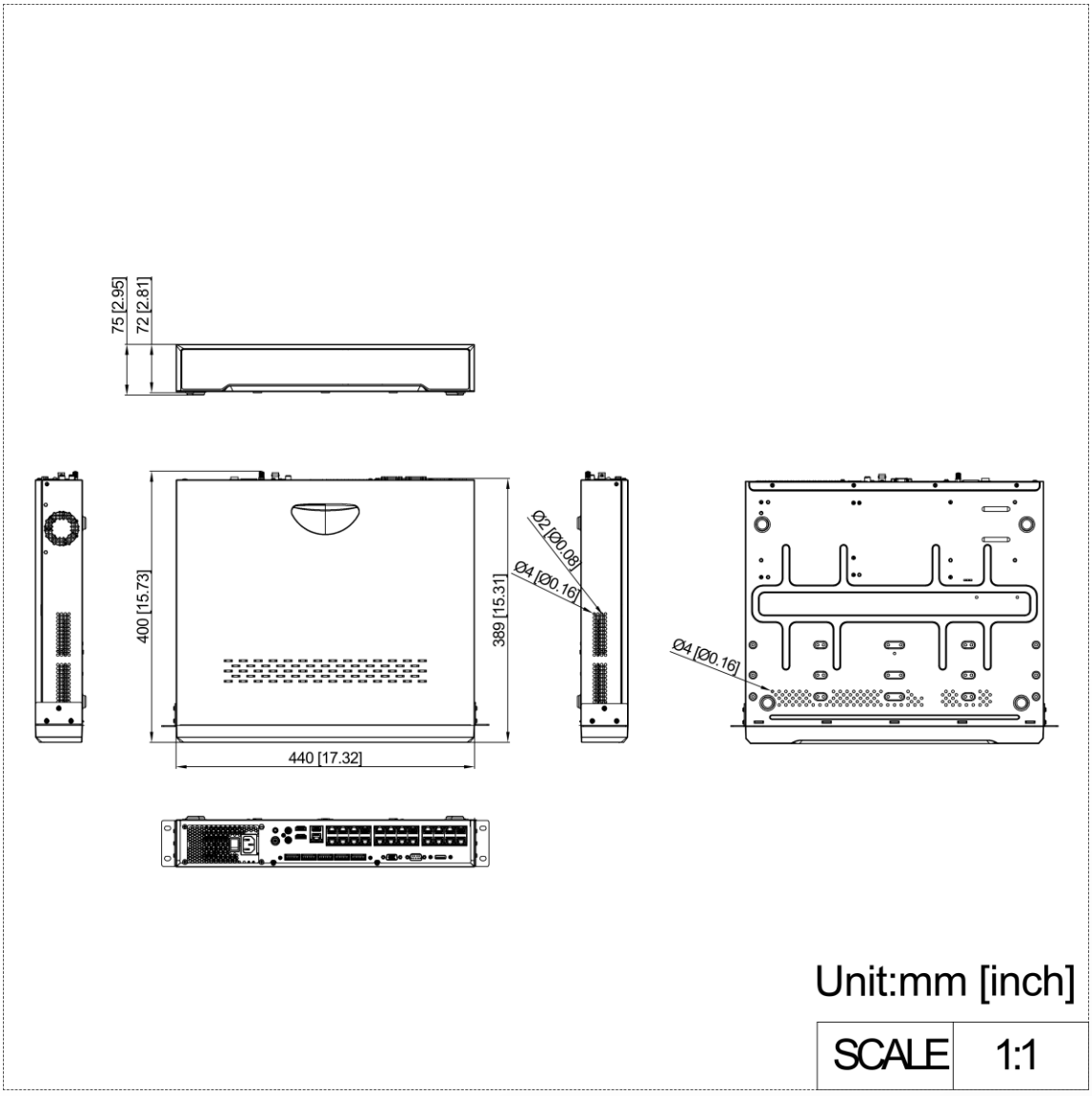

See Far, Go Further

www.hikvision.com
support@hikvision.com

© Hangzhou Hikvision Digital Technology Co., Ltd. Unless otherwise agreed, Hikvision makes no warranties, express or implied. We reserve the right to introduce modifications without notice.

HIKVISION®